QTY	ITEM	LENGTH	L.H.S.	R.H.S.	
2	CS1/4	-	MALE	FEM	
	-	-			

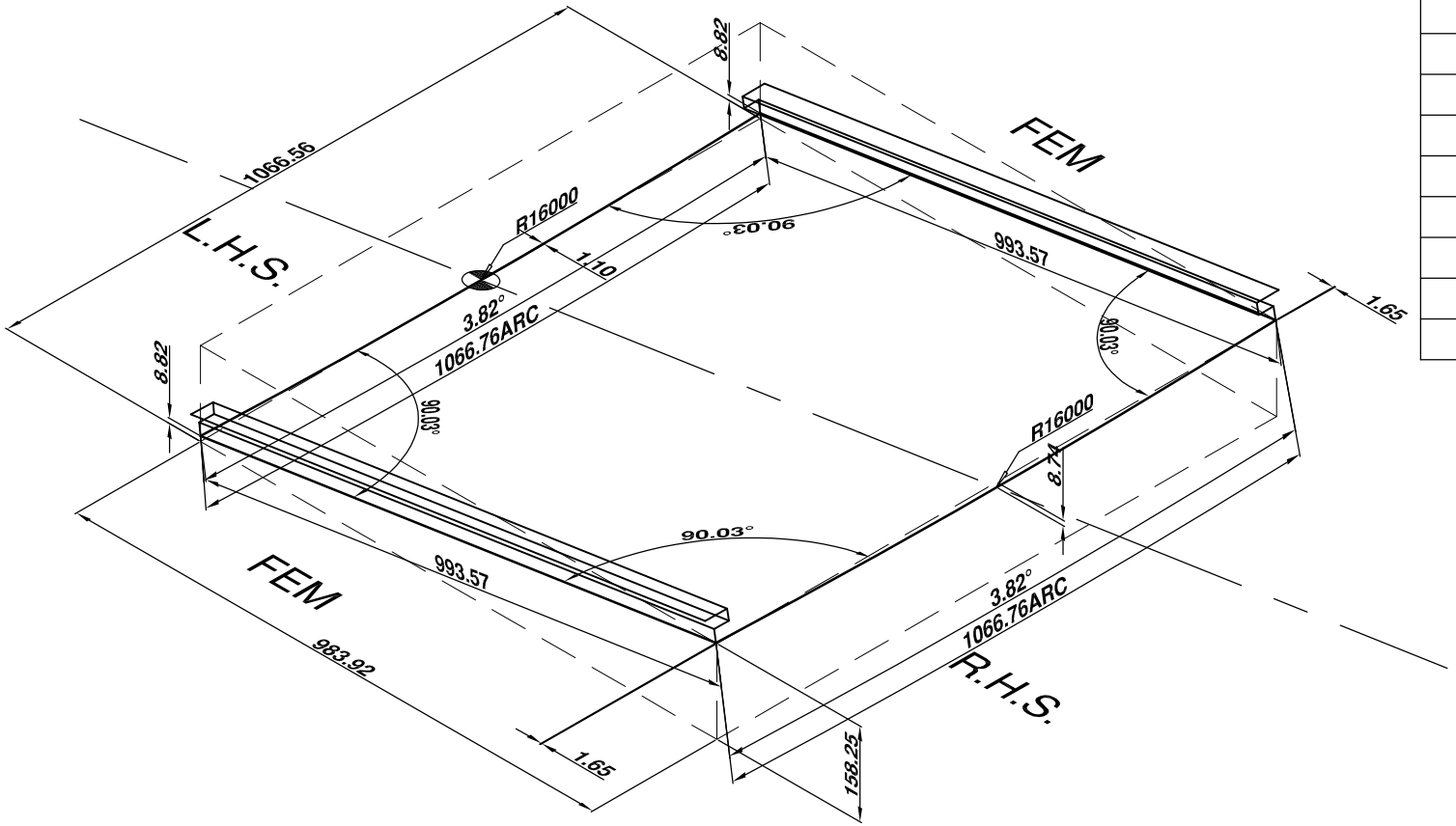

NOTES

APA - ACCESS PANEL ABUTMENT

AP - ACCESS PANEL

X - MIRROR IMAGE (ACROSS LONGITUDINAL CENTRE LINE REFER TO DRG D01 IF CLARIFICATION REQUIRED)

FF - BOTH L.H.S. & R.H.S. HAVE FEMALE JOGGLES

			ITEM No.	CS1/4	GAUGE	2.5	SCALE: NTS	DRG TITLE: CURVED SOFFIT
			MATERIAL	ALUMINIUM	GIRTH	1259 x 8b	DRAWN BY: GKDC / DATE: 15/10/02	DRG No. 2107-M10 / REV
	15/10/02		COLOUR	RAL 9016 MATT	LENGTH		CHECKED BY: / DATE:	