ALL RIGHTS RESERVED. THIS DRAWING OR ANY PART THEREOF MUST NOT BE REPRODUCED WITHOUT PERMISSION OF MERO

GLASS JOINT PLAN SECTION

(11)

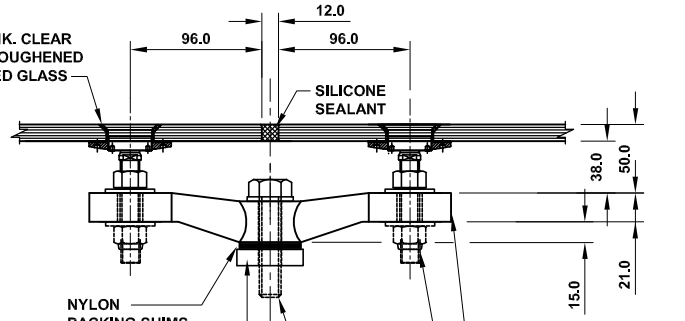

HIGH LEVEL PLAN SECTION

(10)

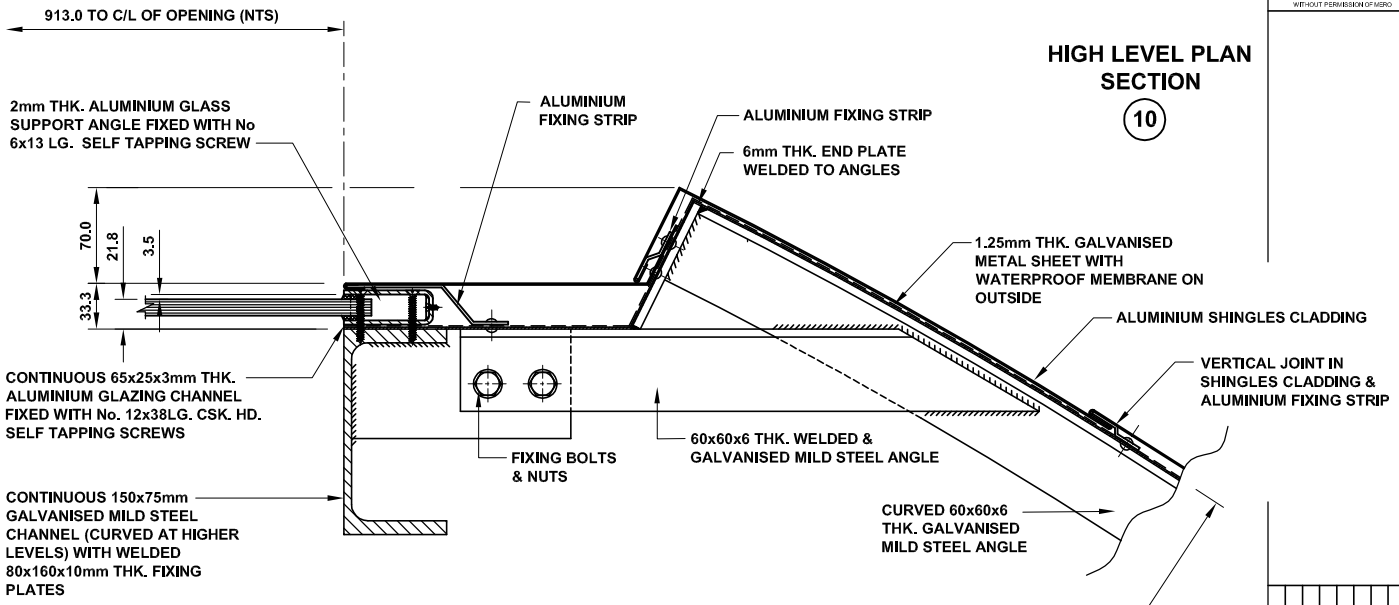

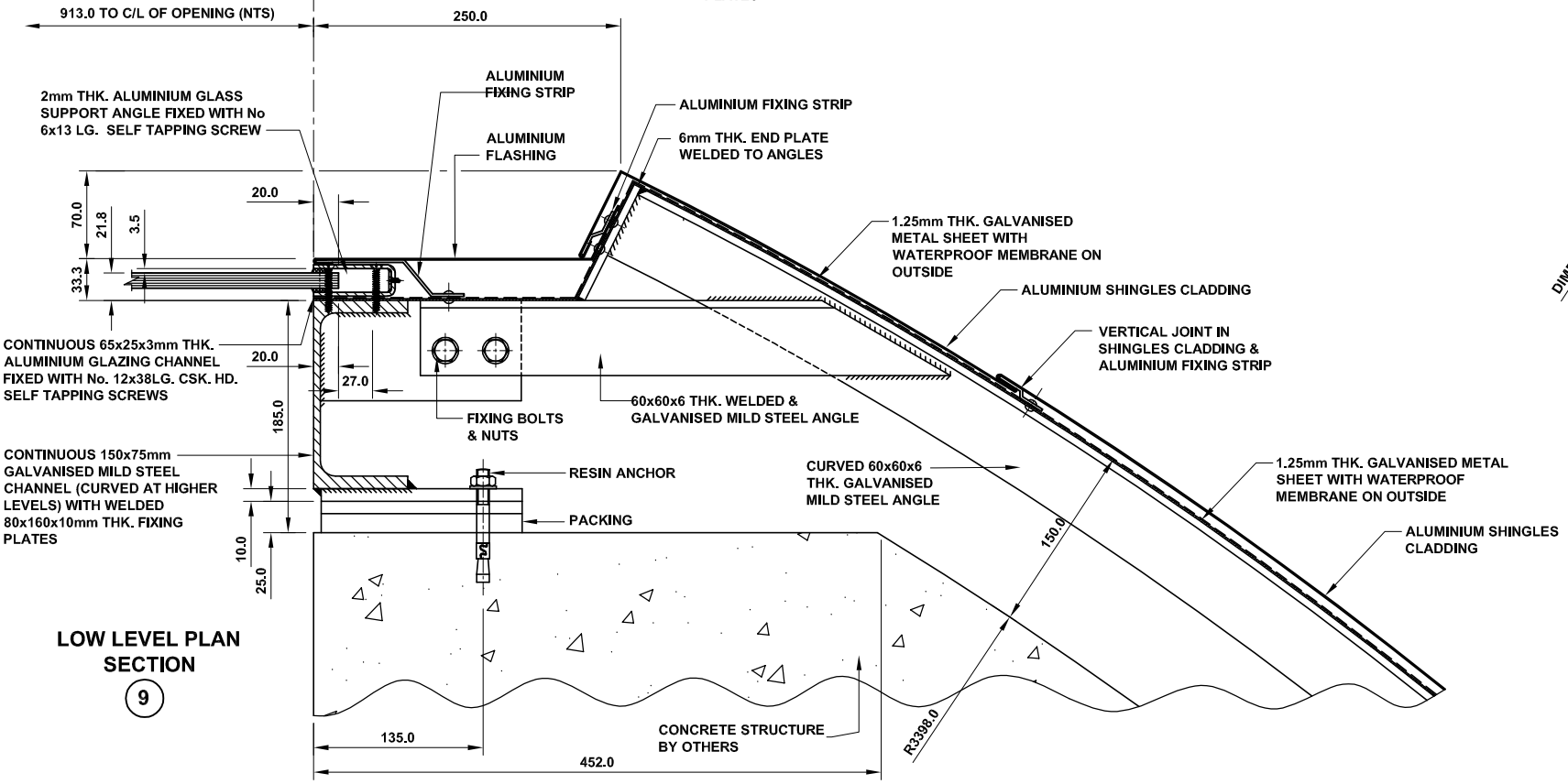

LOW LEVEL PLAN SECTION

(9)

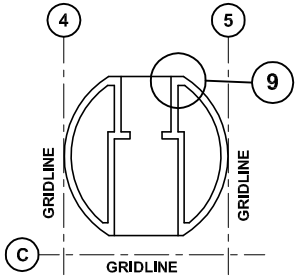

SECTION LOCATION PLAN

REV	DATE	DRAWN	CHECKED	DESCRIPTION
D	09-05-2002	GKDC	-	RESIN ANCHORS WERE NOTED AS EXPANDING ANCHORS, GLAZING CHANNEL MODIFIED
C	26-02-2002	GKDC	-	MODIFIED TO ARCH. COMMENTS
B	5-02-2002	GKDC	-	GLAZING COVER & SUPPORT ANGLE MODIFIED
A	17-01-2002	GKDC	-	25mm CONC. TOL. ADDED (DETAIL 9), CONC. STRUCTURE DELETED (DETAIL 10)

PROJECT: ATC TOWER FARNBOROUGH AIRPORT

SUBJECT: ATC

TITLE: PLAN SECTION INTERFACE DETAILS OF SHINGLE CLADDING WITH LIFT-SHAFT GLAZING & GLAZING BOLT DETAILS Nos. 09, 10 & 11

DRAWN	CHECKED	DATE	SCALE
GKDC	-	12/12/2001	1:2@A1

PROJECT No.	DRAWING No.	REVISION	SIZE
27365	105	D	A1L